NO.: QB/YH R&D PS D085A

SPECIFICATIONS

16” Outdoor Red Color Seven Segment Display

Part No.: YHDL-11601SRA

SHENZHEN YUHONG ELECTRONICS CO., LTD

Add: C Building, HuaFeng Fusen Industrial Zone, Xixiang of Bao an District, Shenzhen China
Tel.: 86-755- 26488141; Fax.: 86-755-33592852 E-mail: sales@yuhongled.com
http://yuhongled.en.alibaba.com;
http://yuhongled.manufacturer.globalsources.com
http://www.yuhongled.com

YHDL-11601SRA

1. FEATURES

- High intensity and reliability.
- Low power requirement
- I.C. compatible
- LED Viewing Angle: 70/35 degrees

2. PACKAGE DIMENSIONS:

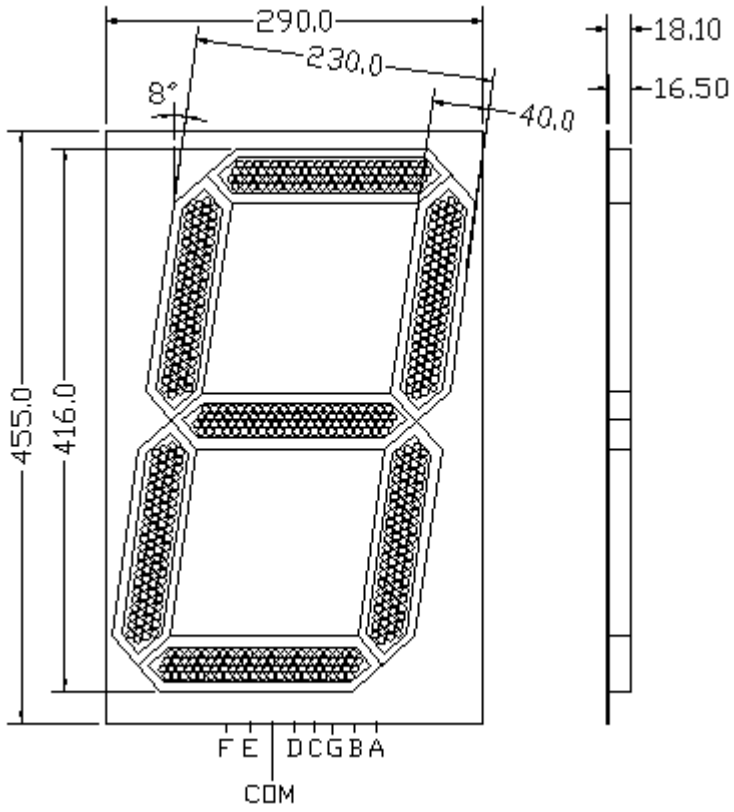

NOTES:

All dimensions are in millimeters, tolerance are ± 0.25 mm unless otherwise noted.

3. INTERNAL CIRCUIT DIAGRAM.

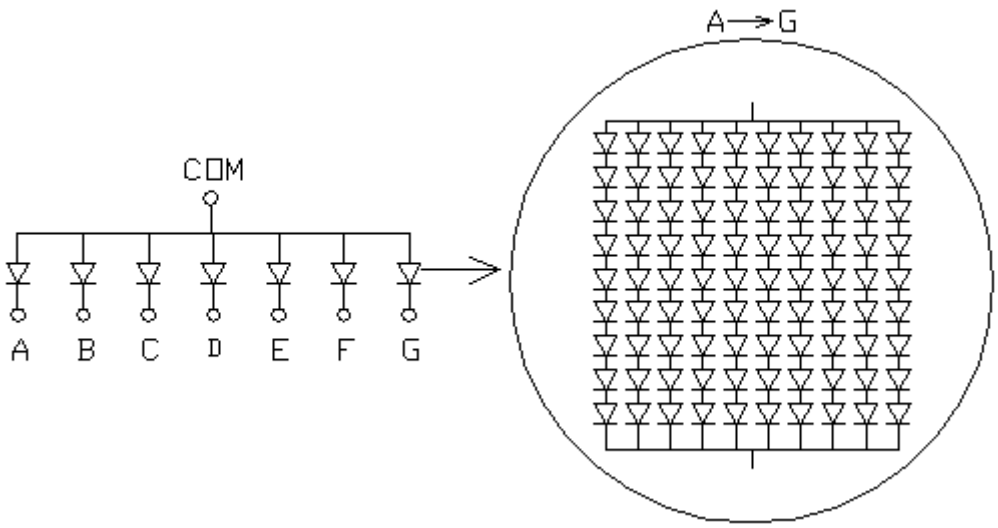

4. ABSOLUTE MAXIMUM RATINGS Ta=25℃

PARAMETER	Red		UNIT
Power dissipation per segment	80X90		mw
Peak forward current per segment*	80X10		mA
Continuous forward current per segment**	15X10		mA
Reverse voltage per segment	5X9		V
Operating temperature range	-30～80		℃
Storage temperature range	-35～85		℃
Solder temperature 1/16 inch below seating plane for 3 seconds at 260℃			

NOTES:

* 1/20 duty cycle 0.1 mes pulse width

** We advise average forward current is 15mA

5. ELECTRICAL/OPTICAL CHARACTERISTICS Ta=25℃

ITEM	SYMBOL	CONDITION		RATING			UNIT
				min	typ	max	
Luminous Intensity	IV	Red	IF=20mA	—	3000X90	—	mcd
				—	—	—	
Peak Emission Wavelength	λP	Red	IF=20mA	—	625	630	nm
				—	—	—	
Spectral Line Half-width	△λ	Red	IF=20mA	—	20	—	nm
				—	—	—	
Forward Voltage per segment	VF	Red	IF=200 mA	—	2.0X9	—	V
				—	—		
Reverse Current per segment	IR	Red	VR=45V	—	—	500	μA
				—	—		

6. CAUTIONS:

a）When being used, do not be over the corresponding limited scale and note in our specification.

b）For some products with the static electricity mark, please operate refer to the rules of static electricity fence.

c）When designing, please consider the factor of heat, and taking keep away measure to avoid high temperature.

d）Do not clean the product with organic impregnant as some of them may damage the product.